voo_voo:9xx

VV 9X2

: fiche produit

Les hauts dossiers uniques des canap s Voo_voo:9xx permettent de cr er des espaces priv s dans les grands espaces ouverts tels que les universit s, les centres de congr s ou les bureaux en open space.

La collection permet de construire n'importe quel arrangement de meubles avec des propri t s acoustiques lev es.

design:
Bejot Development Team

Site du produit
lien vers le site

bejot:

dimensions

VV 9X2

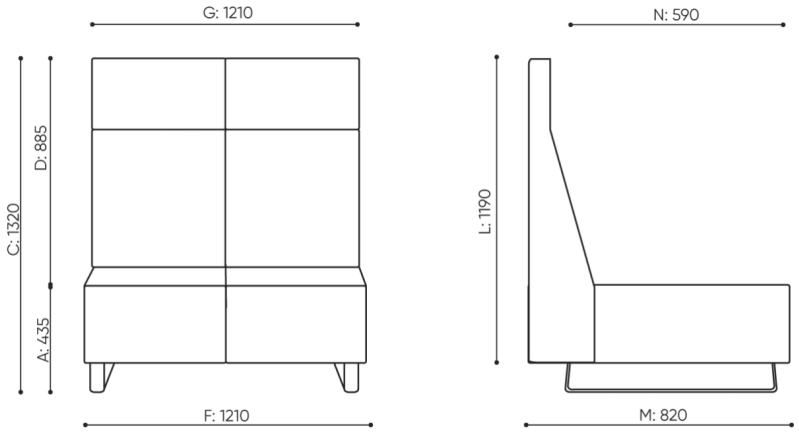

VV 902

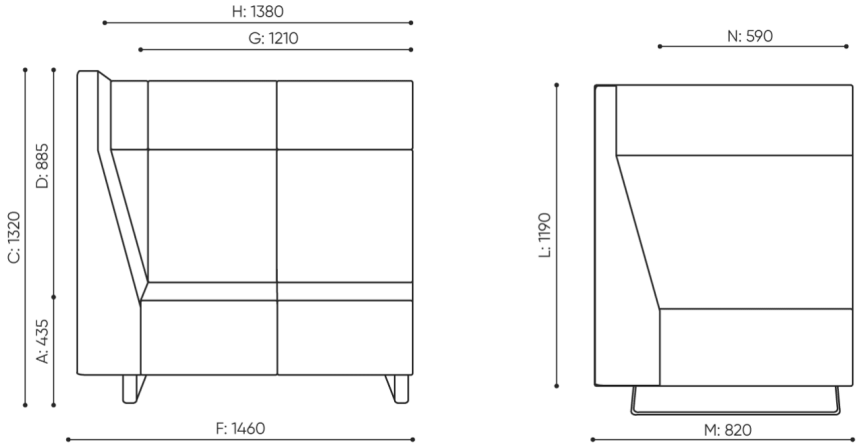

VV 912

A seat height: overall dimensions

B seat height

C chair height: overall dimensions

D backrest height

F chair width: overall dimensions

G seat width

H backrest width

K height from the floor to the armrest

M chair depth: overall dimensions

N seat depth / seat lenght

Dimensions are approximate and may vary depending on the selected product configuration. The requirements of the standard are always met.

mat riaux disponibles pour la collection

1st price group	Fenno, Keimo, Sawana
2nd price group	Alaska, Alpa, Charles, Charles - Studio Design, Cura, Pastel, Roccia, Valencia
3rd price group	Ally, Ally SD, Alpa-Studio Design, Blazer, Cura SD, Easy SD, Oceanic, Silvertex , Silvertex - Studio Design, Synergy, Synergy - Studio Design
4th price group	Oceanic-Studio Design, Remix - Studio Design
5th price group	Steelcut Trio 3
Cuir	Leather
Metal	Metal - powder coated

bejot:voo_voo:9xx